How Magnesium Redefines Battery System Architecture
for the era of electrification

Dustin Grace
Co-Founder & CEO

Çağkan Yildiz
Co-Founder & CTO

INTRODUCTION

“

Electrification is an efficiency problem, and efficiency, at its limit, is a mass problem.

Mass is the limiting factor that defines what electrification can and cannot do.

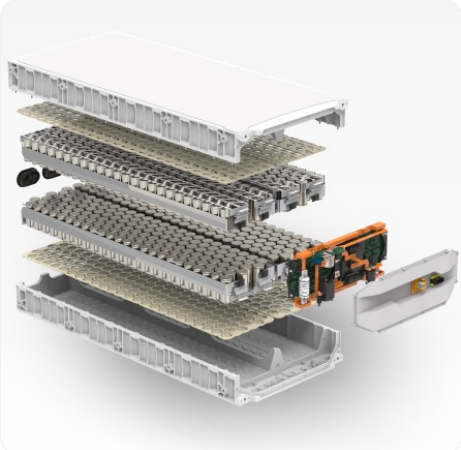

The battery industry has spent decades and billions of dollars optimizing cell materials in pursuit of energy density gains. The progress has been real. It was the right first problem to solve: the cell was the bottleneck, and the industry attacked it correctly. But the critical question is not only how good the cell can be, it is how much of that cell-level performance can be preserved, amplified, and delivered at the pack level. That question has gone largely unanswered.

The system architecture that surrounds the cell has been treated as a fixed cost of the design. Non-cell mass, thermal management complexity, structural inefficiency, and materials-driven manufacturing constraints have been largely accepted as given. They are not. And waiting for the next generation of cell chemistry to solve a system-level problem is a strategy the industry has already tested. The breakthrough cells have not arrived on schedule, and even when they do, a poorly architected pack will consume a significant fraction of whatever they achieve.

The opportunity is not better cells or better packs. It is both. A cell-agnostic architecture that eliminates non-cell mass, simplifies thermal management, and accepts multiple chemistries allows each generation of cells to deliver its highest possible value at the system level. This is the premise on which Estes Energy Solutions was built, and the engineering challenge that the Magnus™ battery platform was designed to solve.

Today’s battery structures are largely comprised of aluminum, a material with genuine advantages that has served the early electrification transition well. As the demands of next-generation platforms grow, however, aluminum’s strength-to-weight properties and recycling constraints are approaching the boundaries of what can be delivered at the system level. **Magnesium,** engineered properly, offers a step-change beyond those boundaries.

Magnesium is the lightest structural metal on earth, one-third lighter than aluminum by volume, with superior specific stiffness and strength, equivalent heat-spreading capability per unit mass, superior EMI shielding at equal wall thickness, and greater thermal mass per kilogram, making it a more effective passive heat sink than aluminum at any given system weight. Magnesium is geographically abundant, increasingly accessible from low-carbon domestic sources, and recyclable without the contamination constraints that cap aluminum's recycled content in structure-critical applications. Its barriers to commercial deployment have historically been a complicated supply chain, flammability, poor formability, and susceptibility to corrosion. Since founding in April 2024, Estes’ engineering team has been working to solve each of these challenges through intensive research and development and close collaboration with trusted partners embedded in the global magnesium ecosystem.

Estes’ first product born of this effort is Magnus™, a magnesium-based thermo-structural battery platform engineered for commercial-scale electrified mobility. Magnus™ delivers 230+ Wh/kg and 375 Wh/L at the system level, about 35% more energy dense gravimetrically and nearly 30% more volumetrically than the cell-equivalent baseline.

230 WH/KG
Gravimetric
Energy Density (GED)

375 WH/L
Volumetric
Energy Density (VED)

35% MORE
energy per unit mass
vs conventional systems

75% FEWER
unique components
vs conventional systems

©Estes Energy Solutions, Inc.

SCALE OF TRANSITION

Electrification is reshaping every segment of mobility, while simultaneously creating entirely new product categories. This spans from passenger vehicles, commercial trucks, rail systems, and marine vessels of today, and is advancing to aerial mobility platforms, robotics, autonomy, and physical AI. In every one of these applications, battery mass is a governing constraint: it determines payload capacity, range, efficiency, and TCO.

Outside the United States, the structural shift toward electrification continues largely unabated. The European Union's Fit for 55 framework mandates a full phase-out of new internal combustion engine vehicles by 2035, enforceable at the fleet level with significant financial penalties. In China, new energy vehicle production reached 13.2 million units in 2024, representing nearly 40% year-on-year growth [1]. And across commercial trucking, marine, and rail, where total cost of ownership governs purchasing decisions more directly than consumer sentiment or tax policy, the economics of electrification are increasingly compelling on their own terms, independent of any subsidy structure.

"The U.S. transition is inevitable, and when it arrives, it will not be gradual or reversible.

The global trajectory is set by performance requirements and economic logic that operate independently of any policy environment. The evidence is already visible across all modes:

- China now operates more than 680,000 electric buses, 30% of its entire bus fleet, with cities like Shenzhen having fully electrified their public transit years ago.
- In Europe, zero-emission buses reached 60% of the city bus market in 2025.
- The IMO's Net-Zero Framework, approved in April 2025, sets mandatory GHG intensity targets for large ocean-going vessels entering into force in 2027, bringing binding decarbonization requirements to a sector that moves 90% of global trade.
- Port equipment (cranes, yard tractors, and cargo handlers) faces binding electrification mandates at major facilities globally, with the Port of Los Angeles and Rotterdam among those with hard conversion deadlines already in force.
- The world's first electric hydrofoil ferry, the Candela P-12, completed its test program in Stockholm in November 2023 and has entered commercial passenger service[2].
- The advanced aerial mobility sector is graduating from prototype to certification.

The U.S. transition is inevitable, and when it arrives, it will not be gradual or reversible.

BATTERY MASS AS A GOVERNING CONSTRAINT

The battery system is no longer simply an energy store. It is the central architectural and financial element of the electrified machine. As electrification expands beyond passenger vehicles into commercial and high-value mobility applications, battery mass has emerged as a primary engineering constraint. Today, the battery system is frequently the single heaviest component on any electrified platform, which creates cascading consequences throughout mass-sensitive vehicle architectures:

- Energy consumption per unit distance traveled increases with vehicle mass, reducing efficiency and increasing energy costs.
- Payload capacity is directly displaced by battery mass in gross-vehicle-weight-regulated applications. Each kilogram reduced benefits the energy available for range, mission capability, and overall economics.
- Structural, suspension, braking, and chassis components must be over-engineered to accommodate battery weight.
- Total cost of ownership rises as heavier platforms consume more energy and impose greater maintenance loads.
- Regulatory compliance (axle weight limits, airworthiness certificates, vessel stability requirements) becomes a binding constraint when battery mass cannot be reduced.

"The battery system is no longer simply an energy store. It is the central architectural and financial element of the electrified machine.

Mass savings in a battery system do not travel alone. A lighter battery enables a lighter vehicle: structural reinforcement, chassis, suspension, and braking components can all be scaled down when the dominant mass load is reduced. Engineers call this effect **mass decompounding**: the phenomenon by which an initial weight reduction multiplies as it propagates through the vehicle architecture. Research from NREL confirms this multiplier is larger for electric vehicles than for conventional ones, precisely because battery mass represents such a large fraction of total vehicle weight [3]. OEMs that fully optimize around a higher-energy-density battery can realize total vehicle mass reductions of 1.5–2× the direct battery weight savings.

FIGURE 1

Magnus+ III in a Class 8 application.
700kWh at 3.0 tons unlocks mass parity with diesel.

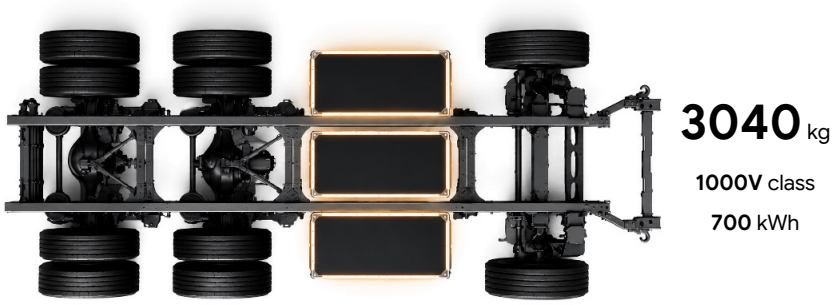

ultra-short 144” wheelbase shown
with 3 individual Magnus packs

ALUMINUM’S STRENGTHS & LIMITATIONS

Aluminum became the dominant material for battery structural systems for sound reasons: it is lightweight relative to steel, well-understood by automotive manufacturing, formable into complex geometries, environmentally stable, generally recyclable, and supported by established global supply chains. These are genuine advantages, and aluminum’s role in enabling the first generation of commercial EVs should not be understated. Structural die-cast alloys such as Silafont-36 (AlSi10MnMg) are capable, ductile, castable, well-engineered materials.

The question is not whether aluminum is a good material (it is!), but at what point do its inherent constraints become binding.

FIGURE 2

3-point bending test of MgCarbonit™ thixo-cast bar demonstrating its ductility, critical for structural applications in mobility.

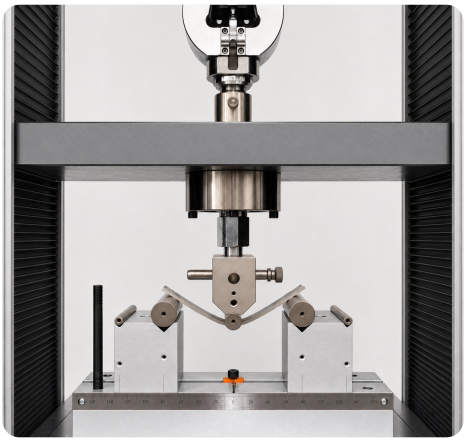

The Recycling Ceiling

The structural aluminum alloys used in battery applications cannot be meaningfully recycled from end-of-life vehicle scrap. The reason is iron contamination. Aluminum has a well-documented recycling challenge in structural applications, and it matters more as electrification scales. The high-performance alloys used in structural components (Silafont-36 being the industry reference we use) require very low iron content to maintain the strength and ductility the application demands. Iron is introduced during the vehicle shredding process, from rivets, fasteners, and other ferrous components, and cannot be removed through conventional refining. Researchers at Oak Ridge National Laboratory (ORNL) have identified this iron contamination as the central barrier preventing end-of-life vehicle scrap from being used in high-performance structural aluminum applications [4]. Peer-reviewed analysis confirms the quantitative mechanism: introducing circulating scrap into Silafont-36 raises iron content above 0.7 wt%, producing approximately 16% reduction in UTS and 18% reduction in elongation [5]. A parallel study confirms the broader consequence: iron in recycled HPDC aluminum promotes brittle intermetallic compounds that degrade tensile strength and ductility across structural alloy families [6].

The practical consequence is that structural battery components made by high-pressure die casting (HPDC) must rely predominantly on primary aluminum, newly smelted from raw ore, rather than recycled content. The electrification transition places increasing pressure on this constraint: conventional ICE powertrains included engine blocks, a large and stable downstream use for lower-grade aluminum scrap tolerant of higher iron levels. As EVs replace ICE vehicles and that downstream market contracts, the recycling economics for structural aluminum tighten further. The result is a material whose sustainability narrative becomes harder to maintain precisely as the industry that depends on it grows. For OEMs and fleet operators, this translates directly to cost: structural aluminum components drawing predominantly on primary metal carry the full upstream extraction burden.

Process Emissions

HPDC is an energy-intensive process. Maintaining a large aluminum melt at temperature between shots requires a continuous natural gas-fired holding furnace at typical automotive-scale HPDC operating parameters. Furnace combustion contributes approximately 1 kg CO_2e per part in direct emissions. This is an additive process-level burden on top of the raw material footprint, which the International Aluminum (IAI) Institute reports at 16.0 kg CO_2e/kg for primary aluminum [7].

For large, structural cast aluminum components drawing predominantly on primary ingot (as the recycling ceiling discussed above requires), raw material extraction alone accounts for most of the cradle-to-cast GHG footprint.

GHG Comparison: Aluminum vs. Magnesium

Estes has conducted a full cradle-to-cast GHG analysis comparing Silafont-36 HPDC (aluminum baseline) against MgCarbonit™-60 for the Magnus™ thermo-structural body. All figures are expressed as kg CO_2e on a cradle-to-cast basis:

Scenario	CO_2e per Battery (kg)	vs. Aluminum Baseline
Silafont-36 / HPDC (primary Al composition)	~1,200	— Baseline
Silafont-36 / HPDC (recycled Al, theoretical max)	~1,100	–8%
MgCarbonit™-60 / Thixomolding (recycled Mg)	~300	–75%
MgCarbonit™-60 / Thixomolding (primary Mg, renewable electrolytic)	~100	–90%

TABLE 1 *Cradle-to-cast GHG emissions comparison, Magnus™ battery system. Sources: [7][8][9][10][11], Estes methodology.*

Two observations are critical. First, the recycled aluminum scenario represents a theoretical ceiling: structural HPDC alloys are constrained to ~85–90% primary content in practice. Second, the recycled magnesium scenario is realistically achievable. Magnesium does not accumulate iron as a tramp impurity from ELV scrap, making secondary magnesium from closed-loop automotive production compositionally stable and Estes' preferred domestic source during initial production years. One figure requires explanation: recycled magnesium carries a higher GHG footprint than the renewable electrolytic primary scenario because secondary remelting is energy-intensive and grid-dependent. As decarbonized energy is integrated into seawater electrolytic production, that scenario becomes the relevant long-term baseline.

MAGNESIUM'S MOMENT

Magnesium is the lightest structural metal on earth, with a density of 1.7 g/cm^3. This is approximately one-third lower than aluminum (2.7 g/cm^3) and one-quarter that of steel (7.9 g/cm^3). No other structural material simultaneously carries mechanical load, manages thermal gradients, interfaces with liquid cooling, protects high-voltage cells, and suppresses electromagnetic interference, at the mass magnesium enables.

Magnesium's limited deployment stems from three core engineering challenges: flammability, poor formability (the inability to produce large geometries at high speed and yield), and susceptibility to corrosion (magnesium is the most anodic metal). Each barrier has a specific and verifiable solution in Estes' tech stack and in-house production capability.

Raw Material Abundance and Supply Sovereignty



Magnesium is one of the most abundant elements on earth. The U.S. Geological Survey describes magnesium resources as 'large to virtually unlimited,' with magnesium-bearing brines estimated in the billions of tons and seawater recovery viable along coastlines globally. The world's oceans contain approximately 1.8×10^{18} kg of dissolved magnesium, effectively inexhaustible on any industrial planning horizon [12].

Magnesium is designated a critical mineral by the U.S. government. China currently accounts for approximately 92% of global primary magnesium production [1], a supply concentration risk analogous to rare earths. China's dominance reflects process economics, not a resource advantage: the incumbent Pidgeon production method is economically unviable outside of China's subsidized energy environment, a structural condition that emerging domestic production technologies are now purpose-built to overcome. The 'critical' designation reflects magnesium's strategic importance and is accelerating domestic investment in alternative production pathways.

Estes is positioned at the center of that buildout, with strategic partnerships across domestic recyclers, aluminothermic primary producers, and seawater electrolytic entrants whose processes model at a fraction of conventional production emissions. Scaling this supply chain positions Estes at the intersection of the world's lightest structural metal and the most geographically secure sources of it.

US Domestic Primary Production Landscape

A new generation of American technology ventures is proving that magnesium production can also be clean. **Tidal Metals** draws magnesium chloride directly from seawater through filtration, crystallization, and dehydration, splitting it electrolytically using renewable power. **Magrathea** uses a similar electrolytic pathway also sourcing from seawater and is now scaling into continental brine as well through its Arkansas joint venture with Tetra Technologies to rebuild domestic magnesium supply. **Big Blue Technologies** takes a third path via aluminothermic reduction, reacting magnesium-bearing ore directly with aluminum to produce metal alongside a value-added co-product.

Carbon intensities across these emerging pathways range from roughly 5 kg CO_2e/kg down to **carbon-negative**, against 24 kg CO_2e/kg for Pidgeon. Some of these processes don't just reduce magnesium's footprint, they erase it and go further. Carbon-negative primary metal is modern alchemy: magnesium oxide, produced alongside metal in some brine electrolytic routes, can be used for ocean alkalinity enhancement. Spread into seawater, it boosts the ocean's capacity to draw down atmospheric CO2, and that drawdown gets credited against the metal's footprint. The result is a structural metal whose production pulls more carbon out of the air than it puts in.

These ventures sit at the top of the magnesium value chain: primary metal production, the foundational step of pulling magnesium out of the earth or sea. Estes occupies the complementary position downstream, converting primary magnesium into high performing alloys through MgCarbonit™, forming and coating it through Levius™, and ultimately delivering it as a thermo-structural battery platform in Magnus™.

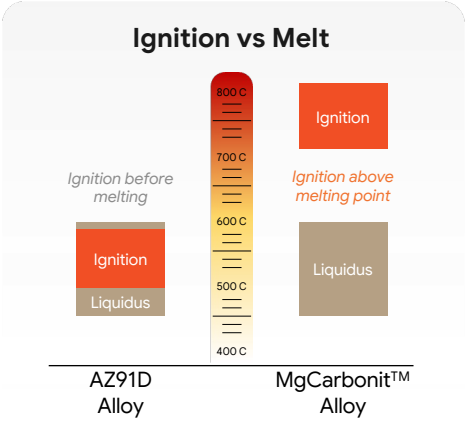

FIGURE 2

Commodity Alloy vs MgCarbonit Alloy ignition behavior.

3rd party Flammability Test [LINK TO VIDEO]



Flame Retardancy

Standard magnesium alloys ignite near their melting point, creating an unacceptable safety profile for high-voltage battery applications. Estes has developed MgCarbonit™, a proprietary metal-matrix composite alloy derived from a commodity alloy with several dopant additives. The combination of alloying elements with an inline carbon nanoparticle mixing process shifts the ignition point above the melting point, yielding a flame-retardant component that retains critical mechanical properties and high castability. Third-party flammability testing conducted to FAA Aircraft Materials Fire Test Handbook standards (Ch. 25) has confirmed no sustained ignition under oil burner exposure conditions [13] [14].

Automotive-Scale Giga-Forming

Thixomolding has been validated as an effective shaping method for magnesium alloys but has historically been limited to components under approximately 5 kg due to equipment and alloy constraints. More recently, innovators in China and Europe have demonstrated larger format thixomolding capability, validating the process at scale. With the help of our manufacturing equipment partners, Estes is building a 'giga' thixomolding machine in the USA, to be commissioned 1H2027. The centerpiece of Estes' vertically integrated manufacturing system, this investment will be one of the most capable thixomolding machines in the world. Shot capability is approximately 30kg at a rate of one shot per minute. This modern capability directly addresses the scale barrier that has confined magnesium to peripheral automotive components for three decades.

> *"Estes estimates that it will be a multi-kiloton processor of magnesium alloy by 2030.*

Corrosion Resistance

Magnesium alloys without surface treatment are susceptible to galvanic and salt-fog corrosion, particularly in applications with multi-material contact and exposure to marine or road-salt environments. The Levius™ coating stage delivers a multi-layer stack engineered for exceptional corrosion protection, chemical and wear resistance, and dielectric performance. The Levius™ coating stack (ceramic layer combined with organic topcoat) is the most critical element of Estes' signature magnesium cell-to-pack architecture.

THE ESTES SOLUTION: LEVIUS™

“
The best part is no part.
The best process is no process.

Levius™ is Estes’ patent-pending, vertically integrated process that governs every stage of production from raw alloy to a finished thermo-structural battery chassis: alloying, forming, and multi-layer coating.

No stage is outsourced. No stage is generic. Each is proprietary and each is optimized for the physical and economic requirements of automotive at scale.

Three proof points define what Levius™ has achieved in practice:

- The monocast architecture integrates flame-retardancy directly into the alloy solving this architecturally. Thermal management, structural load-bearing, and high-voltage isolation merge into a single component, deleting dozens of parts.
- Giga-thixomolding enables a production rate of one part per minute at 30 kg shot size, matching the throughput requirements of high-volume automotive supply.
- Estes has reduced plasma electrolytic oxidation (PEO) coating cost by 65% from initial development, making PEO viable at automotive scale.

By integrating endothermic and exothermic processes under one roof, Estes captures waste across the production sequence, minimizing energy consumption and cost. The output is a monocast thermo-structural body: a single component that protects the internal high-voltage system from mechanical abuse and rugged outdoor environments, thermally conditions the cells to endure a lifetime of cycling and fast-charging, and pushes cell-to-pack energy density further than any conventional architecture allows.

Stage 1: Mixing (MgCarbonit™ Alloy)

MgCarbonit™ is Estes' proprietary alloy, commercialized through its majority-owned subsidiary Core12 GmbH. Derived from the proven AZ91D and AM60B commodity alloys, MgCarbonit™ incorporates several dopants alongside an inline carbon nanoparticle mixing process. This metal-matrix composite, formed at the output of the thixomolding process, retains flame retardancy at the material level while improving castability, mold flow, and maintaining mechanical properties relative to the base alloy.

Achieving flame retardancy in a magnesium alloy is not chemically neutral. The dopant additions responsible for elevating ignition temperature simultaneously increase melt viscosity and reduce the fluidity that large-format thin-wall casting demands, the chemistry that makes magnesium safe in a high-voltage environment, is the same chemistry that compromises die fill.

Estes resolves this through the inline carbon nanoparticle mixing process, introduced into the semi-solid feedstock prior to injection. Operating through dispersion strengthening, grain refinement, and matrix interface optimization, the nanoparticles restore and sometimes exceed the mold flow characteristics of the undoped base alloy, yielding a material that clears the flame retardancy threshold for high-voltage battery applications without conceding the castability that large-format thixomolding requires.

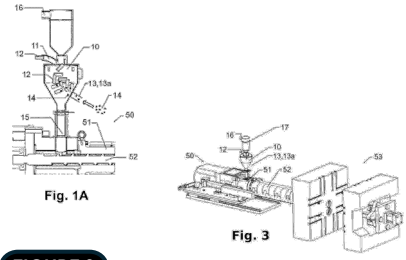



FIGURE 3

MgCarbonit™ ingots & carbon nanoparticles are mixed inline with thixomolding process (patent pending)

Stage 2: Forming (Giga-Thixomolding)
Thixomolding processes magnesium in the semi-solid state (approximately 580-600°C, 30-40% liquid fraction) using an all-electric reciprocating screw barrel. There is no melt holding furnace and no cover gas. The semi-solid feedstock is not susceptible to hydrogen porosity or oxidation, eliminating degassing requirements entirely. Wall thickness can be below 3.5 mm, enabling a 40% mass reduction from the aluminum HPDC equivalent.

The physical basis for these capabilities is magnesium's thixotropic rheology in the semi-solid state. Under low-shear conditions, the slurry maintains high viscosity and stability, preventing gravitational segregation and premature flow. Under the high shear conditions of injection filling, a shear thinning effect drops the viscosity to approximately 20% of its resting value, enabling fluid-like fill behavior through complex thin-wall geometries at reduced injection velocities of 3-4 m/s (half the rate required in conventional HPDC). The result is a stable, laminar fill that substantially reduces air entrapment, oxide inclusion formation, and shrinkage porosity relative to liquid-state die casting. Semi-solid processing temperature is ~100°C below conventional HPDC, further suppressing hot-cracking and thermal distortion, while extending mold life 1.5-2× relative to aluminum die casting tooling.

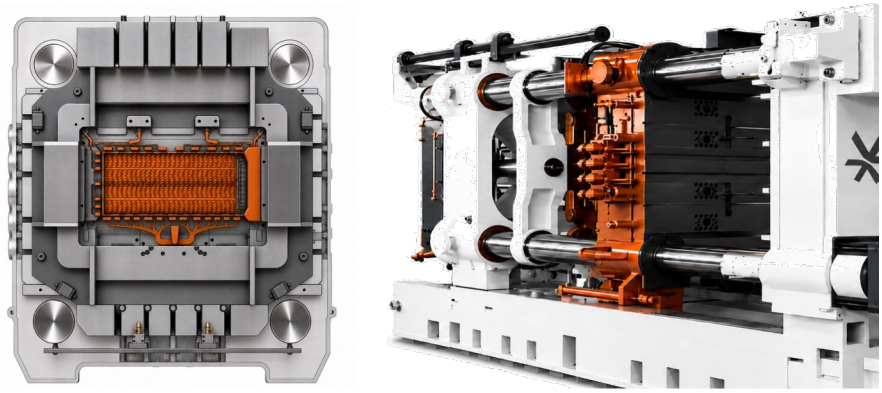

FIGURE 4
Estes' Magnus+ six-piece thixomolding die & giga-thixo press

Stage 3: Coating (Multi-Layer Surface Stack)

Importantly, corrosion protection in the Magnus™ system begins at the alloy level, before any surface treatment is applied. MgCarbonit™ incorporates a proprietary dopant that inhibits the electrochemical oxidation reactions at the grain boundary level. The Levius™ coating stack then adds two further layers of protection, ceramic and organic, creating a system that protects at the material, microstructural, and surface levels simultaneously.

The Levius™ coating stage delivers a two-layer surface stack engineered for the most demanding commercial environments. The first layer is a proprietary PEO ceramic, grown directly from the substrate to form a dense, metallurgically bonded anti-corrosion barrier. A high-adhesion organic topcoat is applied over the ceramic, adding environmental and dielectric isolation for high-voltage systems up to 1500VDC. Each layer serves a distinct and non-redundant function, with the combined stack achieving the industry's gold standard '9' rating in both continuous salt-fog and cyclic corrosion testing, surpassing 2,000 hours of protection in third party ASTM B117 testing.

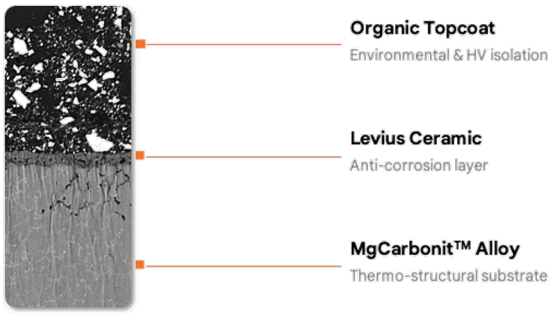

FIGURE 5
Levius™ coating stage (multi-layer surface stack)

Estes' derivation of the PEO process has reduced process steps by 75% and energy input by 60% relative to conventional practice, improvements that make the coating economically viable at automotive scale. The process is RoHS and REACH compliant, with no restricted substances in either the ceramic or topcoat layers. Coating cost has been reduced 65% since development began in 2024, with continued reductions planned.

MAGNUS™: PERFORMANCE ACROSS MOBILITY SEGMENTS

Magnus™, Estes' first go-to-market battery platform, delivers 230+ Wh/kg at the system level using commercially available nickel-based cells. This is a ~35% advantage over the 170 Wh/kg commercial baseline, representative of the current competitive landscape (Cummins Accelera, BorgWarner, American Battery Solutions, Harbinger, et. al.), which employ nickel-based cell chemistries with proximal energy density.

Magnus™ brings heavy-duty cycle-capable commercial cells to applications that have historically required exotic cell chemistries with unacceptable cycle life and cost characteristics. Magnus™ does not depend on waiting for an electrochemical breakthrough. Its value comes from architecture: eliminating non-cell mass, improving structural efficiency, and enabling commercial cells to deliver more of their performance at the pack level today. At the same time, the architecture is chemistry-flexible, allowing future cell generations to be integrated without redesigning the pack.

The tables below quantify Magnus™ mass savings relative to the 170 Wh/kg commercial baseline across multiple segments. Savings scale with pack size, making the Magnus™ advantage most decisive in high-energy applications where weight is a critical constraint.

Segment	Pack Size (kWh)	Baseline Mass (kg)	Magnus™ Mass (kg)	Mass Saved (kg)
Heavy Commercial	500	2,940	2,170	**770**
Class 8 Truck	850	5,000	3,700	**1,300**
Passenger Automotive	80	470	350	**120**
Light Passenger Rail	3,500	20,600	15,200	**5,400**
Marine	200	1,180	870	**310**
Aerospace	300	1,765	1,304	**461**
Defense / Autonomous	100	590	435	**155**

TABLE 2 *Magnus mass savings vs. 170 Wh/kg baseline. Competitor baseline reflects published commercial pack-level energy density [15]*

Segment	Mass Saved	Value per kg	Magnus™ Economic Value per Vehicle
Heavy Commercial	770 kg	$10–30/kg	**$7,700–$23,100**
Class 8 Truck	1,300 kg	$10–30/kg	**$13,000–$39,000**
Passenger Automotive	120 kg	$10–30/kg	**$1,200–$3,600**
Light Passenger Rail	5,400 kg	$10–30/kg	**$54,000–$162,000**
Marine	310 kg	$20–50/kg	**$6,200–$15,500**
Aerospace	461 kg	$200–1,000/kg	**$92,200–$461,000**
Defense / Autonomous	155 kg	$100–1,000/kg	**$15,500–$155,000**

TABLE 3 *Illustrative lifetime economic value from Magnus™ mass savings. Surface transportation benchmarks [15]. Aerospace and defense benchmarks [16].*

Economic Value of Lightweighting

Mass reduction in electrified platforms generates quantifiable, durable economic value. The U.S. Department of Energy and National Academies have established $10–30/kg as the conservative lifetime value benchmark for surface transportation [15]. In aerospace, defense, and marine applications, the value per kilogram is substantially higher, driven by energy cost, payload premiums, certification complexity, and mission-critical performance. In Class 8 trucking, where gross vehicle weight regulation means every kilogram of battery mass directly displaces revenue-generating payload, Magnus™ delivers an estimated $13,000–$39,000 in lifetime economic value per vehicle [17].

Mass decompounding amplifies these gains further at the vehicle level. At equal range targets, a lighter battery also enables a smaller pack. At current cell pricing of $80–110/kWh, each 10–15 kWh reduction in required pack capacity represents $800–$1,650 in per-vehicle bill-of-materials savings.

CELL & THERMAL AGNOSTIC



Cell Chemistry & Form Factor Flexibility

Magnus™ current nickel-based platform yields 230+ Wh/kg at the system level, a ~35% advantage over the 170 Wh/kg commercial baseline. That advantage is architecturally derived: it is a function of the thermo-structural design eliminating non-cell mass, not exotic cell chemistry.

This distinction matters because it means the platform is not cell-chemistry-locked. The battery industry has historically treated cell chemistry selection as a one-time architectural commitment: expensive and slow to reverse. Magnus™ breaks that coupling. The architecture is cell chemistry and form factor agnostic: **cylindrical**, **prismatic**, and **pouch** cells are all accommodated through tooling variation rather than platform redesign. The interior of the pack accommodates different cell form factors and chemistries; the exterior pack dimensions and vehicle interfaces remain unchanged.

An OEM integrating Magnus™ today with NMC cells will not need to requalify the vehicle interface when an LFP variant becomes available. One integration cycle unlocks multiple product tiers, a lower-cost LFP variant and a higher-energy NMC variant from a single platform commitment, multiplying application offerings without multiplying engineering programs.

The same architecture accepts next-generation chemistries as they mature. Silicon-rich cells yield 300+ Wh/kg at the system level, LFP delivers 160+, and sodium-ion 130+. As the domestic cell supply chain matures and new chemistries reach commercial viability, Magnus™ captures every step forward without stranding prior investment. The Levius™ manufacturing system produces the dimensional precision and repeatability that makes this possible. One platform, multiple chemistries, multiple markets.

Thermo-Structural Architecture: Enabling Passive & Active Thermal Management

The thermo-structural body is not simply a structural frame with thermal management bolted on. It is a unified system in which the structural and thermal functions are co-designed from first principles. The relevant thermal performance question is not which material has higher bulk conductivity, it is which architecture spreads, buffers, and rejects heat with the least structural mass. That is the problem Magnus™ is engineered to solve.

Aluminum outperforms magnesium in raw thermal conductivity. But a battery system is not a material coupon, it is a mass-constrained thermal system with complex topology, and bulk conductivity is only one variable in that system. MgCarbonit™ alloys carry a thermal conductivity of approximately 60 W/m·K, sufficient to conduct heat laterally across the monocast body with low resistance. The more consequential thermal properties at the system level are heat capacity and thermal diffusivity. MgCarbonit™ delivers approximately 19% greater thermal diffusivity per unit mass than structural aluminum casting alloys, and a specific heat capacity of ~1,020 J/kg·K, approximately 13% greater than structural aluminum, meaning the monocast body absorbs larger thermal transients per kilogram and equilibrates temperature disturbances faster per kilogram of structure deployed. Because Magnus™ carries significantly less structural mass than an aluminum-equivalent pack, the thermal performance of the system as a whole is not diminished by the per-unit conductivity difference.

Thixomolding compounds this advantage at the geometry level. Thinner walls, achievable at 3.5 mm or below in the semi-solid process, reduce thermal impedance between the cell stack and the structural body. Complex coolant-bay geometries, cast directly into the structure rather than assembled from separate components, increase convective heat transfer surface area while eliminating the interface resistances that attached cooling systems introduce. The result is not a claim that magnesium outperforms aluminum in every thermal metric. It is a thermal architecture engineered around the real constraint: spreading, buffering, and rejecting heat with the least structural mass possible.

This architecture supports three distinct thermal strategies within a single product family:

- For moderate thermal loads (e.g. commercial trucking, many marine platforms, and ground-based autonomous systems), the monocast body acts as a passive thermal sink, conducting heat from the cell stack through the structure and dissipating it across the body surface area, eliminating the need for a dedicated liquid cooling circuit and its associated pumps, plumbing, connectors, and failure modes.
- For higher-performance applications (e.g. fast-charge automotive, heavy-duty-cycle commercial platforms), active liquid cooling channels are cast directly into the structure rather than attached to it, minimizing thermal resistance between the cell stack and coolant path and enabling higher sustained power output.

- For weight-critical aerial platforms, active cooling is eliminated during flight entirely; the thermo-structural body handles in-flight thermal load passively, with off-board thermal conditioning integrated into the charging infrastructure at landing, trading active cooling mass for ground-side infrastructure, a rational exchange where turnaround time and payload fraction are the governing economics.

One architecture. Three thermal strategies. No waste or redesign between them.

ARCHITECTURAL SAFETY: DESIGNING RISK OUT OF THE SYSTEM

The safety properties of the Magnus™ battery system are not features added to a conventional design. They are consequences of the material and the architecture. Magnesium's thermal conductivity, combined with the monocast geometry made possible by Giga-thixomolding, enables a thermo-structural body in which the structural and thermal functions are inseparable. The combination of magnesium's processability in the semi-solid state and its thermal properties is what makes the architecture possible. Two safety outcomes follow directly from that architecture, neither of which requires added hardware or active intervention.

The Field Reliability Problem with Internal Coolant

The dominant battery thermal management architecture in the field today routes liquid coolant through channels, cold plates, or serpentine tubes inside the battery pack boundary, in direct proximity to high-voltage cell stacks. This approach is thermally effective, but it introduces a failure mode that has proven to be one of the most consequential in commercial electrified fleet operation: coolant ingress.

Coolant flood events inside a battery pack do not require a dramatic failure. They are typically latent: a fitting that weeps under thermal cycling, a brazed joint that develops a micro-crack over thousands of charge cycles, a sealing surface that degrades with age and vibration. Inside a conventional battery pack, routine component-level failures become catastrophic. Coolant contacting cell terminals or bus bars creates short circuit conditions and thermal runaway risk. Consequences, such as fleet downtime, warranty cost, safety exposure, and reputational impact, are disproportionate to the initiating failure. The only complete solution is to remove coolant from the high-voltage boundary entirely.

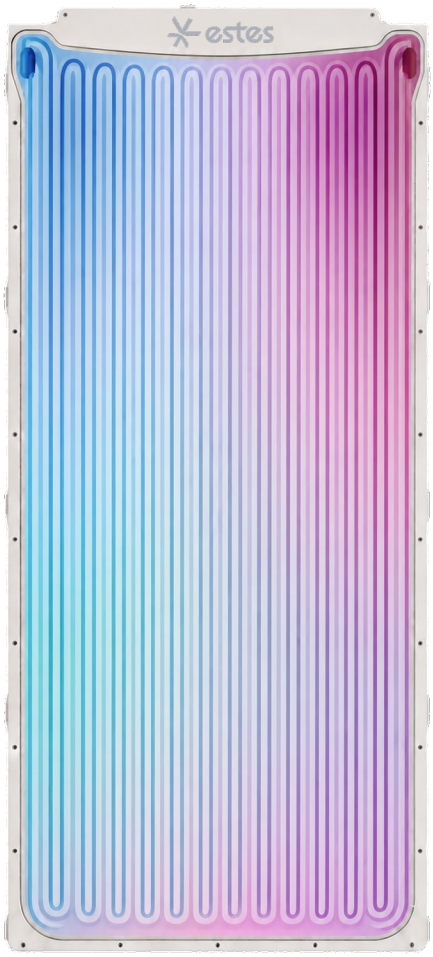

FIGURE 6

Cast thermo-structural liquid cooling circuit (top of battery shown)

Coolant Ingress Architecturally Eliminated

In the Magnus™ architecture, liquid cooling channels are cast directly into the walls of the thermo-structural body, external to the cell cavity and integral to the structure itself. Coolant flows through the exterior skin of the pack, but not inside it. There are no fittings, joints, brazings, or sealing surfaces inside the high-voltage boundary. No latent failure of any coolant-circuit component can result in fluid contacting the cell stack, because no such components exist within the pack boundary.

This is a meaningful distinction from risk-mitigation strategies that rely on improved sealing, enhanced leak detection, or redundant shutoff systems. Those approaches reduce the probability of a coolant flood event; they do not eliminate its possibility. Magnus™ eliminates the mechanism. For fleet operators, insurers, and OEMs evaluating total cost of ownership and safety liability, the difference between "reduced probability" and "architecturally impossible" is material.

Cell-to-Pack Architecture and Passive Propagation Resistance (PPR)

The second critical safety characteristic of the Magnus™ architecture is its passive propagation resistance (PPR): the ability of the pack to contain and arrest a thermal runaway event initiated by a defective or damaged cell, without active intervention.

Cell-to-pack architecture is central to this capability. By eliminating the intermediate module layer that characterizes conventional pack designs, Magnus™ places cells in direct thermal contact with the thermo-structural body. In the event of a cell-level thermal runaway, the monocast magnesium structure acts as a substantial, continuous heat sink, absorbing and redistributing thermal energy across the entire body mass before it can propagate to adjacent cells. There are no module boundaries to breach and cascade across. There is one structural body, one thermal mass, and one containment architecture.

Passive propagation resistance is a structural property of the system, not an outcome dependent on added suppression hardware. Estes validates this property at the extrema of operating and storage conditions: greater than 95% state of charge, 55°C heat soak, coolant system disabled. Additionally, repeated testing across multiple events to establish statistical confidence in the result rather than relying on a single demonstration.

FIGURE 7

Nail penetration test on Magnus™ LV Pack. No Propagation.

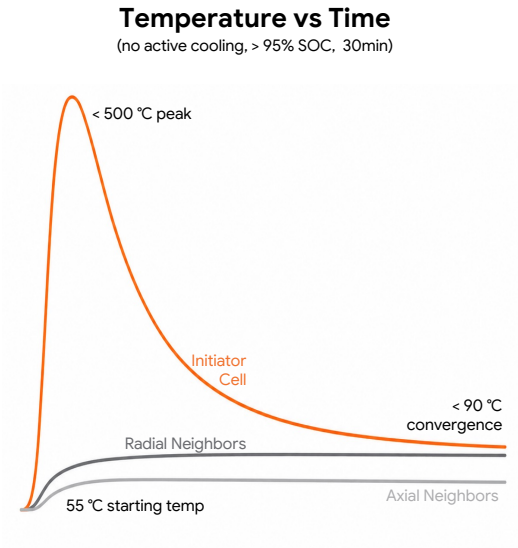

Passive propagation resistance is a structural property of the system, not an outcome dependent on added suppression hardware. Estes validates this property at the extrema of operating and storage conditions: greater than 95% state of charge, 55°C heat soak, coolant system disabled. Additionally, repeated testing across multiple events to establish statistical confidence in the result rather than relying on a single demonstration.

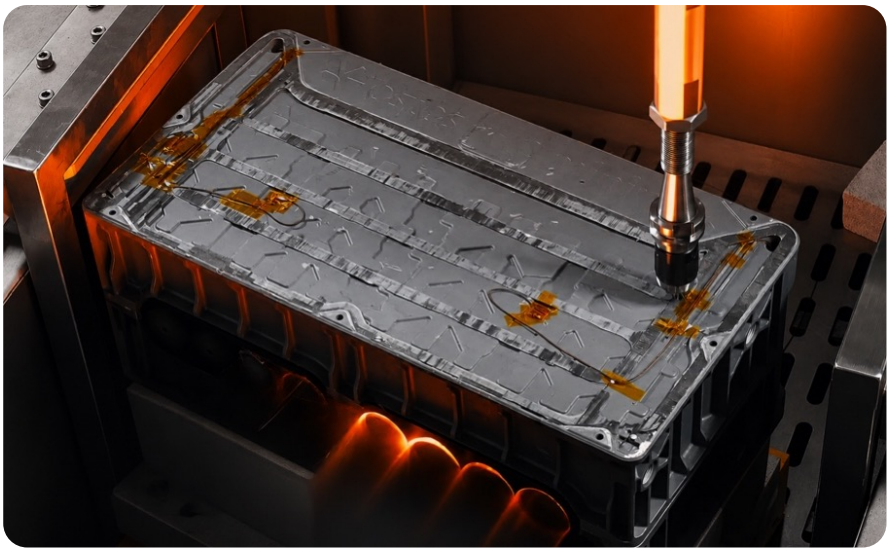

MISSION-CRITICAL & DEFENSE APPLICATIONS

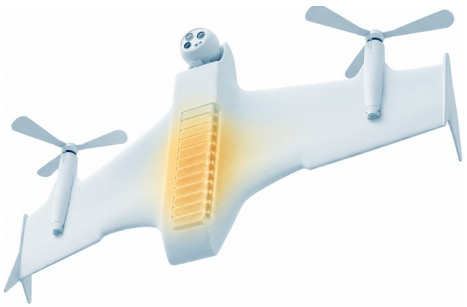

The same performance characteristics that make Magnus™ compelling for demanding commercial applications:

Maximum energy Minimum mass | **High throughput cycle capability** | **Environmental durability** | **Abuse tolerance**

are directly relevant to national security applications. Unmanned ground vehicles, autonomous aerial platforms, and forward-deployed power systems all share a common constraint: energy stored per kilogram of system mass governs mission endurance, operational range, and in many cases, air-transportability thresholds. As the U.S. Department of War accelerates its electrification programs, domestic supply of high-performance battery systems has become a strategic priority.

Autonomous aerial platforms, from small multi-copter surveillance drones to large fixed-wing UAS, represent one of the fastest-growing segments of this demand. Magnesium's combination of low density, thin-wall castability, and passive thermal conductivity makes it particularly well-suited to drone airframe-battery integration. The three die configurations shown below illustrate the scale range: family tools for small multi-copter bodies, symmetric closure tools for fixed-wing platforms, and the large-format monocast die for heavy-lift bodies spanning up to 2,400 mm.

At the small end, thixomolding's ability to achieve wall thicknesses of 0.6–0.8 mm enables complex aerodynamic geometries in a single shot that would require multi-part assemblies in other processes. At the large end, the monocast architecture integrates the battery thermo-structural body directly with the airframe structure, eliminating the interface layer entirely. During high-power flight phases, the cast magnesium body passively spreads heat generated during sustained climb and peak power draw across the full structural surface area, reducing peak cell temperatures without active thermal management hardware, a meaningful advantage in platforms where every gram of cooling hardware trades directly against payload or endurance. At Giga-thixomolding production rates, one part per minute at 30 kg shot size, the economics of structural magnesium shift from specialty manufacturing to volume supply at compelling economics.

Estes does not position Magnus™ as a defense-first product. Commercial applications define the production volume and the cost curve. But its capability is inherently dual-use. Defense represents a high-value, mission-critical segment where Magnus™'s performance profile is particularly well-matched to procurement requirements, and where supply chain

integrity is non-negotiable. Magnus™ is fully compliant with the National Defense Authorization Act (NDAA): magnesium feedstock, sourced exclusively from U.S. producers and allied-nation suppliers, with zero exposure to FEoC-designated or adversarial-nation sources. Estes battery management system (BMS), cells, and all non-cell hardware are U.S.-manufactured or sourced from NDAA-compliant allies. This is a deliberate design principle at Estes, not an afterthought.

FIGURE 8 *Three exemplary die configurations illustrating the scale of Estes forming & coating line capability*

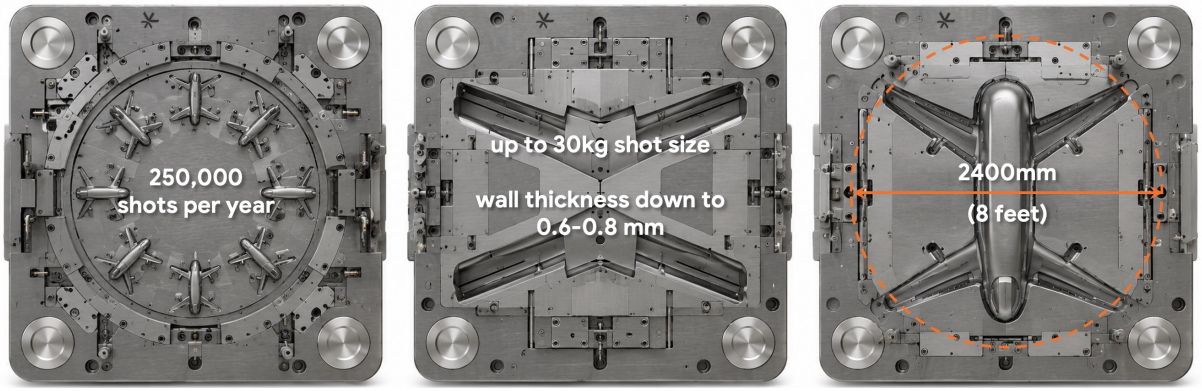

Family Tools
(small)

Symmetric Closures
(medium)

Monocast
(large)

CONCLUSION

The electrification of mobility is one of the defining industrial transitions of the 21st century. It is also one of the most materials-constrained. The battery system sits at the center of every electrified platform, governing payload, range, cost, and compliance. The structural materials that today's systems use are approaching the boundary of what can be delivered.

Magnesium offers a path beyond that boundary: the lightest structural metal, recyclable without stringent contamination constraints, castable without cover gas, and available from essentially unlimited global resources (including seawater). The engineering barriers that historically confined magnesium to small components and peripheral applications now have compelling solutions, delivered by Estes through novel alloys, large-format semi-solid forming, and a coating system that meets or exceeds the corrosion and dielectric requirements of high-voltage battery environments.

What makes Estes singular is not any one of these capabilities in isolation. It is that all of them exist under one roof. Estes is the only U.S. manufacturer combining proprietary flame-retardant magnesium alloy technology, Giga-scale thixomolding, and an automotive-grade corrosion-resistant coating system in a single, vertically integrated production stack. Alloy development, smelting, casting, and coating are not outsourced or assembled from third-party supply chains. They are designed together, optimized together, and produced together, because the performance of the finished system depends on the integrity of every stage.

On a five-year horizon, Estes' supply strategy targets low-GHG domestic magnesium sourced across multiple production pathways: recycling from closed-loop automotive scrap, primary production via aluminothermic reduction from domestic ore, and seawater electrolytic primary production powered by renewable electricity. This portfolio approach progressively reduces the per-battery cradle-to-cast GHG footprint over time, with the long-term trajectory pointing toward the renewable electrolytic scenario modeled at greater than 90% reduction against baseline, while simultaneously eliminating the supply concentration risk that currently characterizes global primary magnesium production.

The platforms being designed today: the Class 8 trucks, eVTOL aircraft, and autonomous systems that will define the next decade of electrified mobility, are being architected now. The structural decisions made in this design cycle will be difficult and expensive to reverse.

For OEMs, fleet operators, and investors evaluating the next generation of electrified mobility platforms, the question is no longer whether magnesium is viable. It is whether their supply chain includes the company that has put in the engineering work to remove its barriers, and whether they move early enough to make that choice on their own terms.

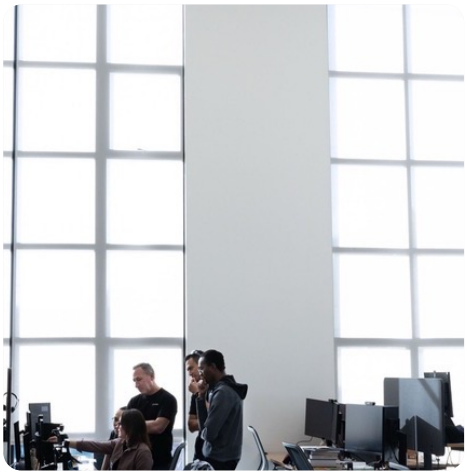

exceptional **s**ystems **t**hat **e**fficiently **s**cale

APPENDIX

Emissions Factors & Data Sources

All GHG figures in this white paper are derived from publicly available, peer-reviewed, or industry-standard sources. The methodology is documented in full in the Estes Lightweighting & Casting GHG Methodology documents (June 2026).

Material / Input	GHG Factor (kg CO_2e/kg)	Source
Primary aluminum (global avg)	16.0	IAI (2022)
Recycled aluminum (gate-to-gate)	0.5	IAI (2022)
Primary Mg — Pidgeon Process (China)	24.0	Ehrenberger/DLR (2020)
Recycled Mg (AM50A/AM60B)	4.9	ALCA study (2025)
Primary Mg — Electrolytic (USA)	0.4	Estes estimate
Silicon	10.0	Saevarsdottir et al. (2021)
SF_6 cover gas (HPDC, 1% blend)	0.6 per part	IPCC AR6; industry standard
HPDC electricity (AZNM grid)	1.2 per part	EPA eGRID 2023 Rev2
Thixomolding electricity (AZNM grid)	0.7 per part	EPA eGRID 2023 Rev2

TABLE A-1 *Emissions factors used in cradle-to-cast GHG analysis.*

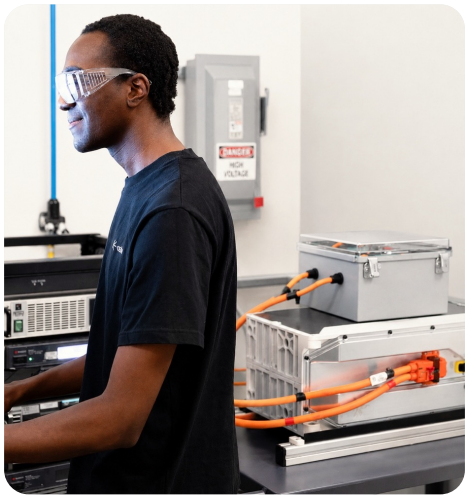

Key References

[1] Ministry of Industry and Information Technology (MIIT), China. *NEV Sales Data.* (2024).

[2] Guinness World Records. *First electric hydrofoil ferry.* Candela Technology AB (SWE).

[3] Brooker, A., Ward, J., Wang, L. *Lightweighting Impacts on Fuel Economy, Cost, and Component Losses.* NREL/CP-5400-57607. SAE World Congress (2013).

[4] Oak Ridge National Laboratory. *Iron Contamination from Vehicle Shredding as Barrier to Structural Aluminum Recycling.* ORNL (2026).

[5] PMC (2025). *AlSi10MnMg with circulating scrap: iron-driven UTS and elongation reduction.* NIH PMC11902067.

[6] ScienceDirect (2025). *Iron in recycled HPDC aluminum: brittle intermetallic formation and mechanical property degradation.* doi:10.1016/j.resconrec.2025

[7] International Aluminium Institute. *Aluminum Sector GHG Emissions.* IAI (2022).

[8] U.S. EPA. *Emissions & Generation Resource Integrated Database (eGRID) 2023 Rev2.*

[9] IPCC. *Sixth Assessment Report (AR6). Global Warming Potential Factors.* (2021).

[10] Ehrenberger, S.; Dieringa, H.; Friedrich, H.E. *Carbon Footprint of Magnesium Production.* DLR Institute of Vehicle Concepts / IMA LCA Update (2020).

[11] ALCA Study (2025). *Carbon Footprint of AM50A Recycled Magnesium Alloy.* ScienceDirect. 4.94 kg CO_2e/kg cradle-to-gate.

[12] U.S. Geological Survey. *Mineral Commodity Summaries: Magnesium.* USGS (2024).

[13] Vauth Aviation Components GmbH & Co. KG. *Test Certificate No. MZ12548 Confidential — available on request.*

[14] Aeroblaze Laboratory Inc. *Flammability Test Report. Burn Test: AZ91D vs. MgC91 Magnesium Alloy Housings.* ISO 17025 Accredited. *Confidential — available on request.*

[15] National Research Council. *Technologies and Approaches to Reducing the Fuel Consumption of Medium- and Heavy-Duty Vehicles.* National Academies Press (2010).

[16] U.S. Department of Defense. *Cost Analysis and Program Evaluation: Weight-Value Benchmarks for Airborne and Ground Systems.* (DOD internal; public program data.)

[17] Del Pero, F. et al. *Automotive Lightweight Design: Simulation Modeling of Mass-Related Consumption for Electric Vehicles.* Machines, 8(3), 51 (2020).